ELECTRICITY

Electricity and its Effect (notations)

Physical Quantity	**Symbols**	**SI unit**
Voltage (potential difference)	V	Volt (V)
Power	P	Watt (W)
Charge	Q	Coulomb (C)
Work or Energy	W	Joule (J)
Resistance	R	Ohm (Ω)
Current	I	Ampere (A)
Resistivity	ρ	Ohm metre (Ω m)

Current:

The rate of flow of charges (Q) through a conductor is called current (I) and is given by.

Current = $\frac{\text{charge}}{\text{Time}}$ or $I = \frac{Q}{t}$. The SI unit of current is ampere (A).

$$1 \text{ Ampere } = \frac{1 \text{ coulomb}}{1 \text{ second}}$$

Electromotive force: The potential difference at the terminals of cells in an open circuit is called electromotive force (emf) and is denoted by letter E.

Potential difference is the work done in bringing a unit charge from one place to another.

$$\text{Potential Difference} = \frac{\text{work}}{\text{charge}}, \quad 1 \text{Volt (V)} = \frac{1 \text{Joule (J)}}{1 \text{Coulomb (C)}}$$

Ohms law: At any constant temperature the current (I) flowing through a conductor is directly proportional to the potential difference (V) across it. Mathematically,

$I \propto V$ vice-versa $V \propto I$

or $V = RI \Rightarrow R = \frac{V}{I}, I = \frac{V}{R}$

where R – Resistance, V – Voltage (P.D.), I – Current

Symbols of a few commonly used components in Circuit Diagrams

Component	**Symbol**	**Component**	**Symbol**
An electric cell		Electric bulb	
Battery of cells		A resistance	
Plug key or switch (open)	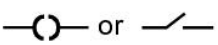	Variable resistance (Rheostat)	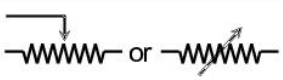
A closed plug or switch	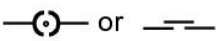	Ammeter	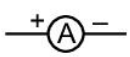
A wire joint		Voltmeter	

Wires crossing		Galvanometer	

Resistance: Resistance is a property of a conductor by virtue of which it opposes the flow of electricity through it. Resistance is measured in Ohms (Ω). Resistance is a scalar quantity.

Conductor: Low-resistance material which allows the flow of electric current through it is called a conductor. All metals are conductors except Hg and Pb etc.

Resistor: High-resistance materials are called resistors. Resistors become hot when current flows through them (nichrome wire is a typical resistor).

Insulator: A material which does not allow heat and electricity to pass through it is called an insulator. Rubber, dry wood etc., are insulators.

Equivalent Resistance: A single resistance which can replace a combination of resistances such that current through the circuit remains the same is called equivalent resistance.

Law of Combination of Resistances in Parallel: If resistance $R_1, R_2, R_3, ...$ etc are connected **in parallel** then the equivalent resistance (R) is given by

$$I = I_1 + I_2 + I_3$$

$$I = \frac{V}{R}, I_1 = \frac{V}{R_1}, I_2 = \frac{V}{R_2}, I_3 = \frac{V}{R_3}$$

$$\frac{V}{R} = \frac{V}{R_1} + \frac{V}{R_2} + \frac{V}{R_3}$$

$$\frac{1}{R} = \frac{1}{R_1} + \frac{1}{R_2} + \frac{1}{R_3} ..... + \frac{1}{R_n}$$

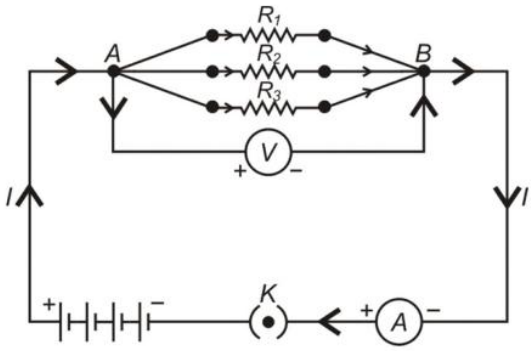

Important Formulae:

1. Coulomb's law

$$F = \frac{K \times q_1 \times q_2}{r^2} \text{ (} k \text{ is constant of proportionality)}$$

q_1 and q_2 = two electric charges

r = distance between two electric charges

F = Force

2. $V = \frac{W}{Q}; W = V \times Q; Q = \frac{W}{V}$

$V = p.d.$ W = work done, Q = Quantity of charge transferred

3. $V = R \times I; R = \frac{V}{I}; I = \frac{V}{R}$

$V = pd$; R = Resistance, I = current.

4. $R = \frac{\rho \times l}{A}; \rho = \frac{R \times A}{l}$

R = Resistance; l = length; A = Area of cross section; ρ = rho, a constant known as resistivity

5. Series combination $R = R_1 + R_2 + R_3 ..... + R_n$

6. Parallel combination $\frac{1}{R} = \frac{1}{R_1} + \frac{1}{R_2} + \frac{1}{R_3} ..... + \frac{1}{R_n}$

For equal resistances

$Rs = nR$ (For series connection)

$Rp = \frac{R}{n}$ (For parallel connection)

$\frac{Rs}{Rp} = n^2$

Rs = Effective resistance in series

Rp = Effective resistance in parallel

n = number of resistors

R = Resistance of each resistor

7. $P = \frac{W}{t}$; Power $= \frac{\text{work}}{\text{time}} = \frac{\text{Energy consumed}}{\text{Time}}$

8. $W = V \times I \times t$; Power = potential difference × current × time

$\Rightarrow \quad (W = I^2 Rt) \Rightarrow \left(W = \frac{V^2 t}{R}\right)$

9. $P = V \times I$; Power = potential difference × current

10. $P = I^2 \times R$; Power = $(\text{current})^2 \times \text{resistance}$

11. $P = \frac{V^2}{R}$; Power $= \frac{(\text{potential difference})^2}{\text{resistance}}$

12. Electric energy = $P \times t$; electric energy = power × time